10 533 424 30 **GROHE CUBEO CONCEALED SHOWER SYSTEM WITH TEMPESTA 250**

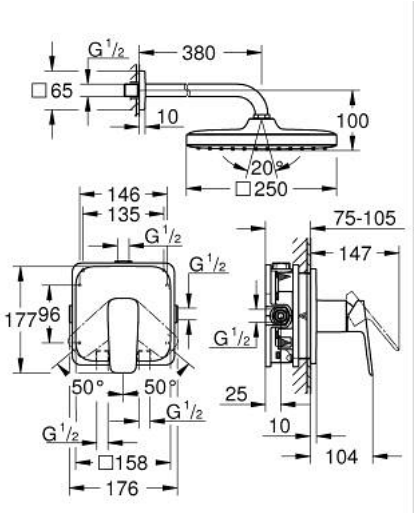

תיאור המוצר

- צבע: matte black
- כולל:
- trim set for GROHE Rapido SmartBox (35 604)
- concealed single-lever shower mixer (101 777)
- Tempesta 250 Cube head shower set 9.5 l/min (26 687) including horizontal shower arm 380 mm
- without roughing-in set 35 600/35 604 (please order separately)